1

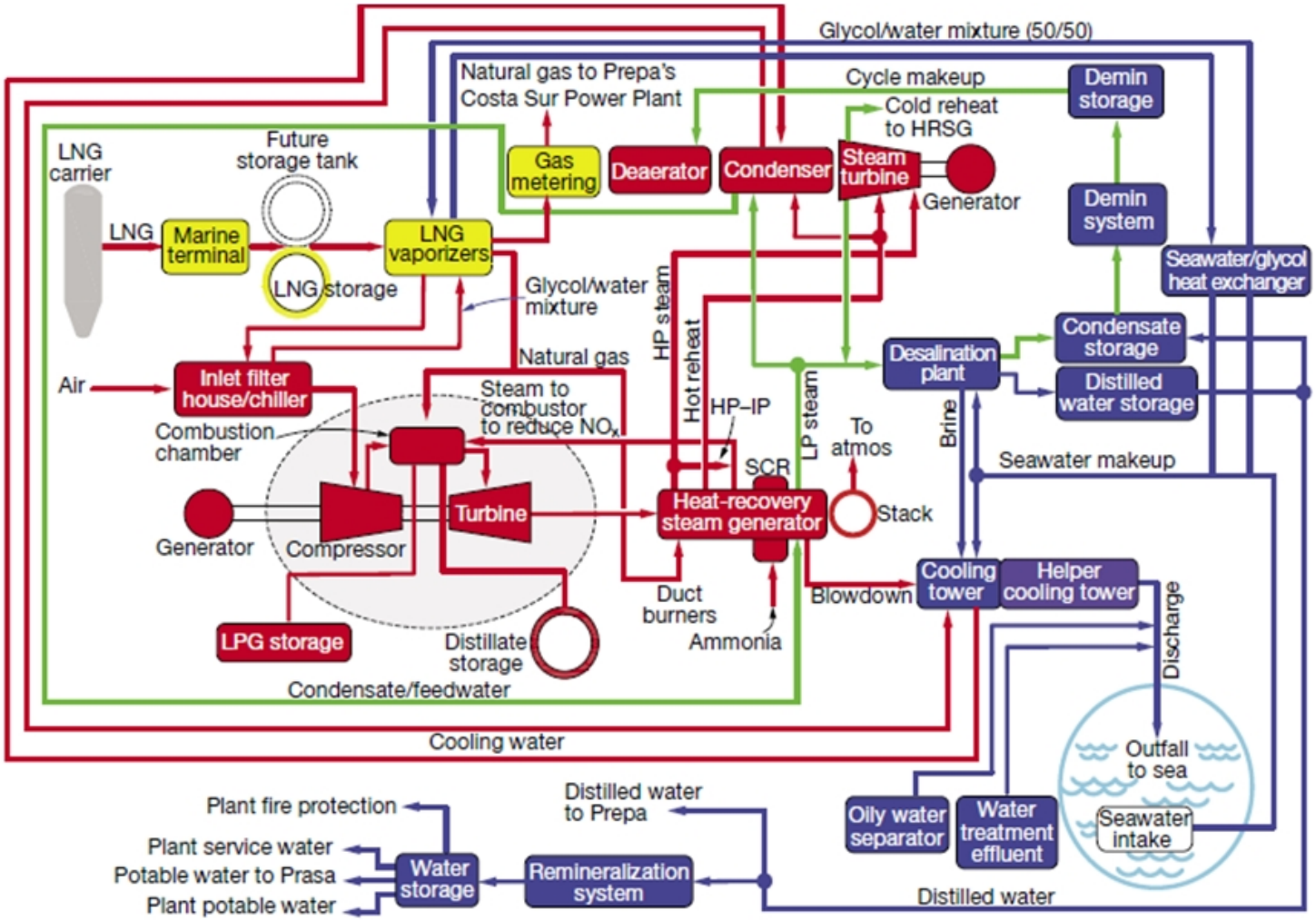
Glycol/water mixture (50/50)
Natural gas to Prepa's Costa Sur Power Plant
Cycle makeup
Cold reheat to HRSG
Demin storage
LNG carrier
Future storage tank
Gas metering
Deaerator
Condenser
Steam turbine
Generator
Demin system
LNG
Marine terminal
LNG vaporizers
LNG storage
Glycol/water mixture
Seawater/glycol heat exchanger
HP steam
Hot reheat
Condensate storage
Natural gas
Desalination plant
Distilled water storage
Air
Inlet filter house/chiller
Steam to combustor to reduce NOx
HP–IP
LP steam
To atmos
Brine
Combustion chamber
SCR
Seawater makeup
Turbine
Heat-recovery steam generator
Stack
Generator
Compressor
Cooling tower
Helper cooling tower
Duct burners
Blowdown
Discharge
LPG storage
Distillate storage
Ammonia
Condensate/feedwater
Cooling water
Outfall to sea
Distilled water to Prepa
Plant fire protection
Oily water separator
Water treatment effluent
Seawater intake
Plant service water
Potable water to Prasa
Plant potable water
Water storage
Remineralization system
Distilled water

2

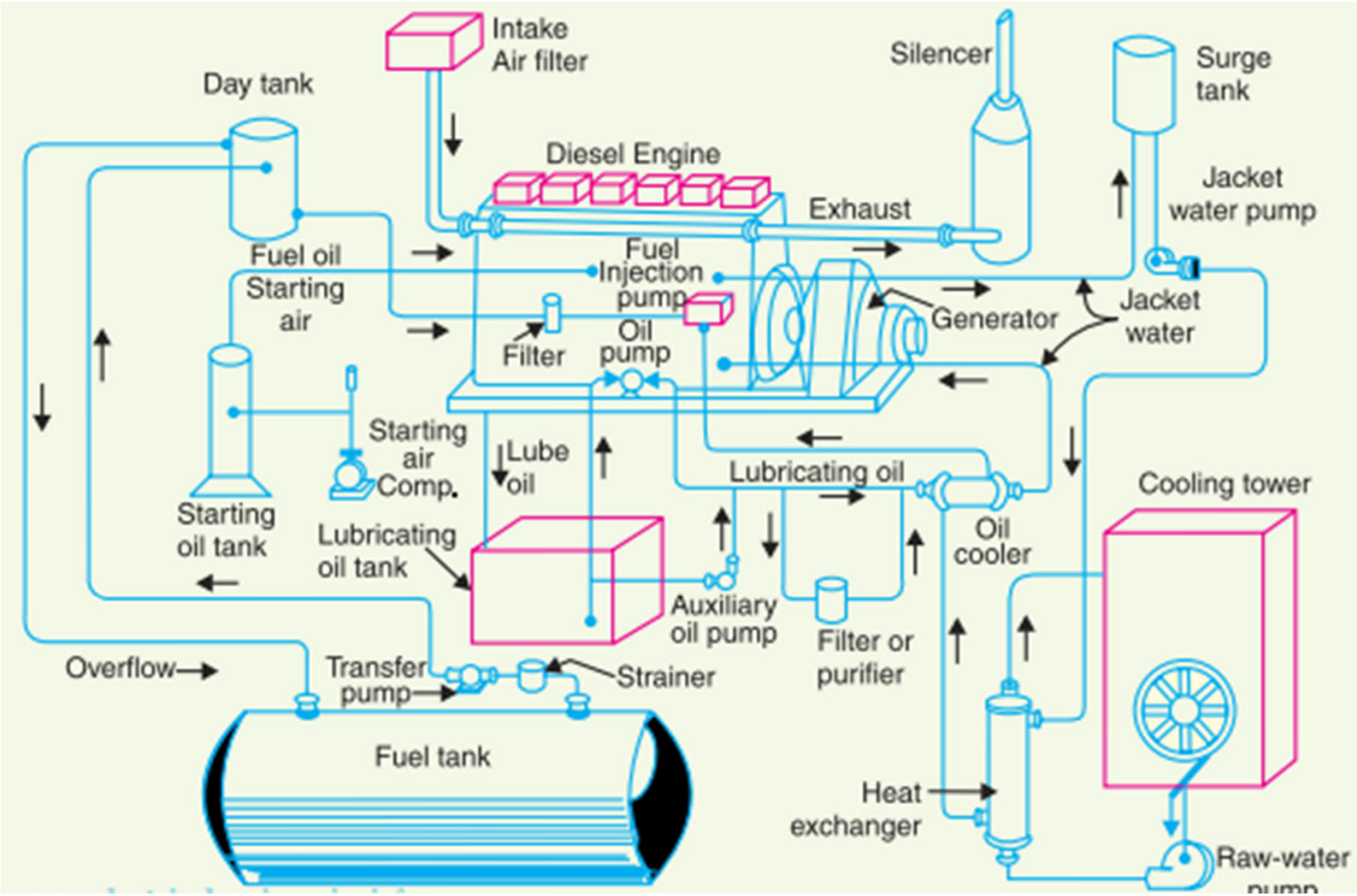
Intake
Air filter
Silencer
Surge
tank
Day tank
Diesel Engine
Jacket
water pump
Exhaust
Fuel oil
Fuel
Injection
pump
Starting
air
Generator
Jacket
water
Filter
Oil
pump
Starting
air
Comp.
Lube
oil
Lubricating oil
Cooling tower
Starting
oil tank
Lubricating
oil tank
Oil
cooler
Auxiliary
oil pump
Filter or
purifier
Overflow
Transfer
pump
Strainer
Fuel tank
Heat
exchanger
Raw-water

3

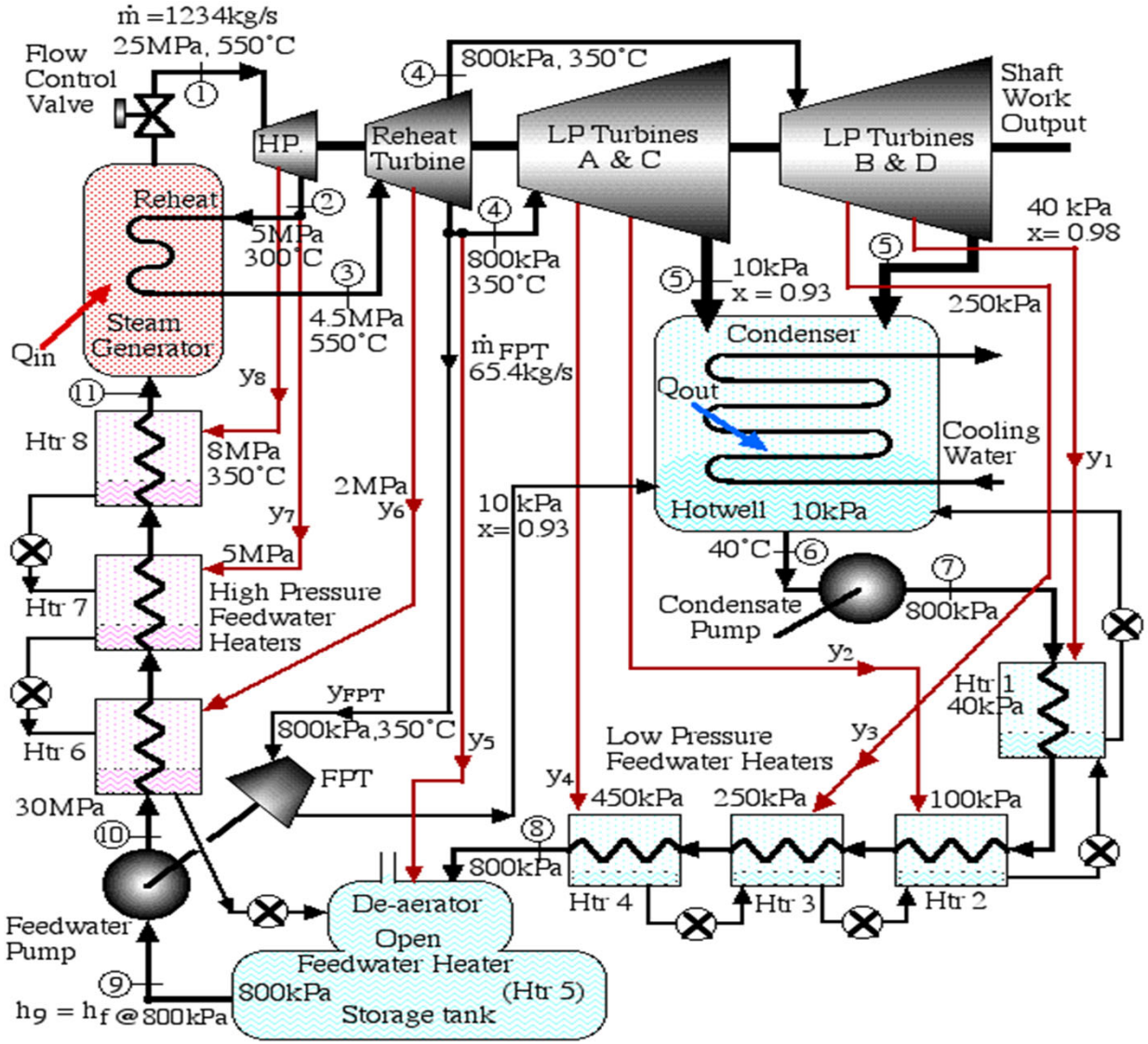
ṁ =1234kg/s
25MPa, 550°C
Flow Control Valve
1
HP
Reheat Turbine
4
800kPa, 350°C
LP Turbines A & C
LP Turbines B & D
Shaft Work Output
Reheat
2
5MPa 300°C
3
4.5MPa 550°C
4
800kPa 350°C
5
10kPa x = 0.93
40 kPa x= 0.98
5
250kPa
Steam Generator
Qin
y8
ṁ FPT 65.4kg/s
Condenser
Qout
Cooling Water
y1
11
Htr 8
8MPa 350°C
2MPa
y6
y7
10 kPa x= 0.93
Hotwell 10kPa
40°C
6
7
5MPa
Htr 7
High Pressure Feedwater Heaters
Condensate Pump
800kPa
y2
Htr 1 40kPa
yFPT
800kPa,350°C
y5
Htr 6
FPT
Low Pressure Feedwater Heaters
y3
y4
450kPa
250kPa
100kPa
30MPa
10
8
800kPa
Htr 4
Htr 3
Htr 2
Feedwater Pump
De-aerator
Open Feedwater Heater (Htr 5)
9
800kPa
Storage tank
h9 = hf @ 800kPa

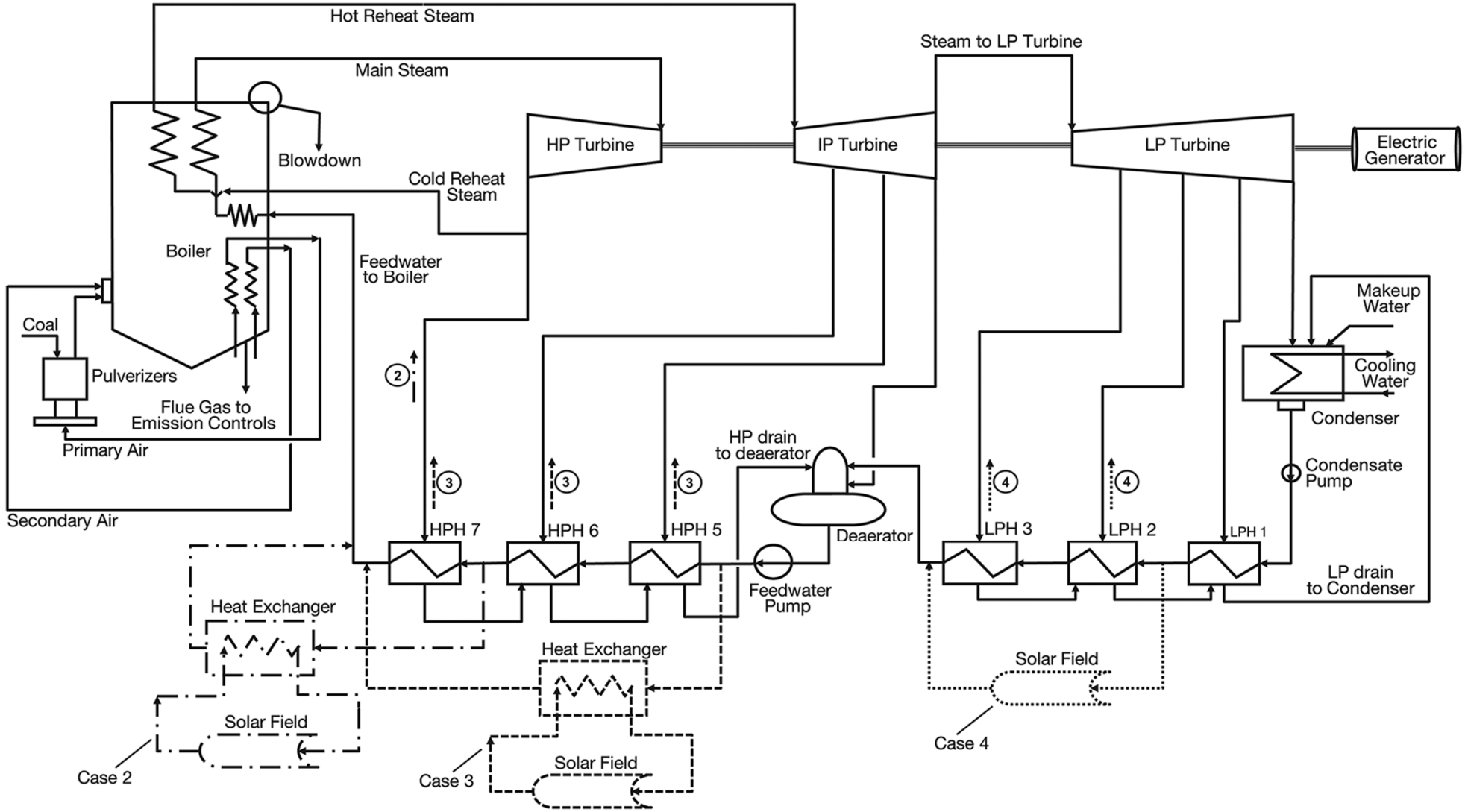
Hot Reheat Steam
Main Steam
Steam to LP Turbine
Blowdown
HP Turbine
IP Turbine
LP Turbine
Electric Generator
Cold Reheat Steam
Boiler
Feedwater to Boiler
Coal
Pulverizers
Flue Gas to Emission Controls
Primary Air
Secondary Air
Makeup Water
Cooling Water
Condenser
Condensate Pump
HP drain to deaerator
Deaerator
HPH 7
HPH 6
HPH 5
LPH 3
LPH 2
LPH 1
Feedwater Pump
LP drain to Condenser
Heat Exchanger
Solar Field
Case 2
Case 3
Case 4

5

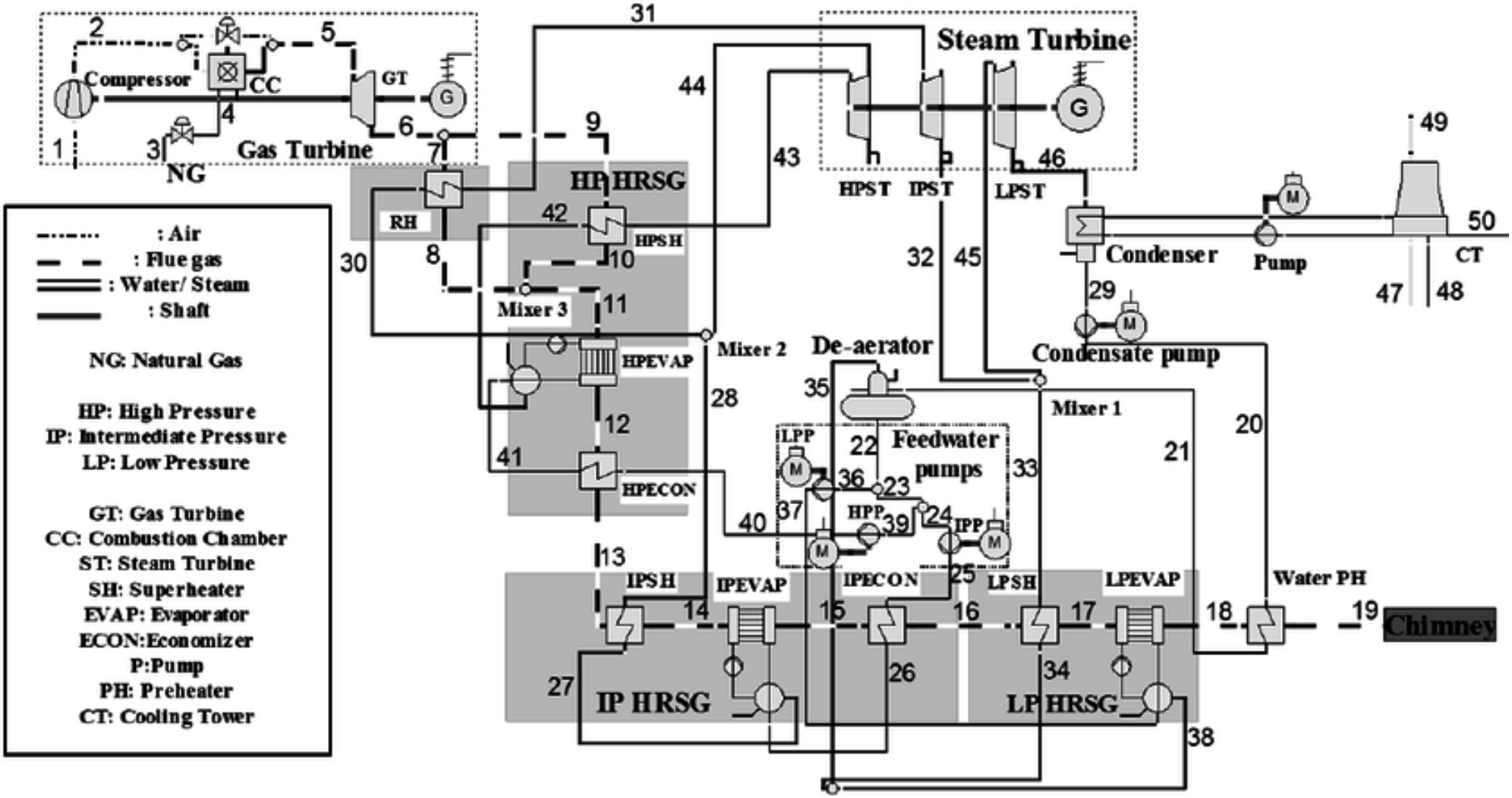
Compressor
CC
GT
G
Gas Turbine
NG
Steam Turbine
HPST
IPST
LPST
HP HRSG
RH
HPSH
Mixer 3
HPEVAP
HPECON
Mixer 2
De-aerator
Feedwater pumps
LPP
HPP
IPP
Condenser
Pump
CT
Condensate pump
Mixer 1
Water PH
Chimney
IPSH
IPEVAP
IPECON
LPSH
LPEVAP
IP HRSG
LP HRSG
: Air
: Flue gas
: Water/ Steam
: Shaft
NG: Natural Gas
HP: High Pressure
IP: Intermediate Pressure
LP: Low Pressure
GT: Gas Turbine
CC: Combustion Chamber
ST: Steam Turbine
SH: Superheater
EVAP: Evaporator
ECON:Economizer
P:Pump
PH: Preheater
CT: Cooling Tower

6

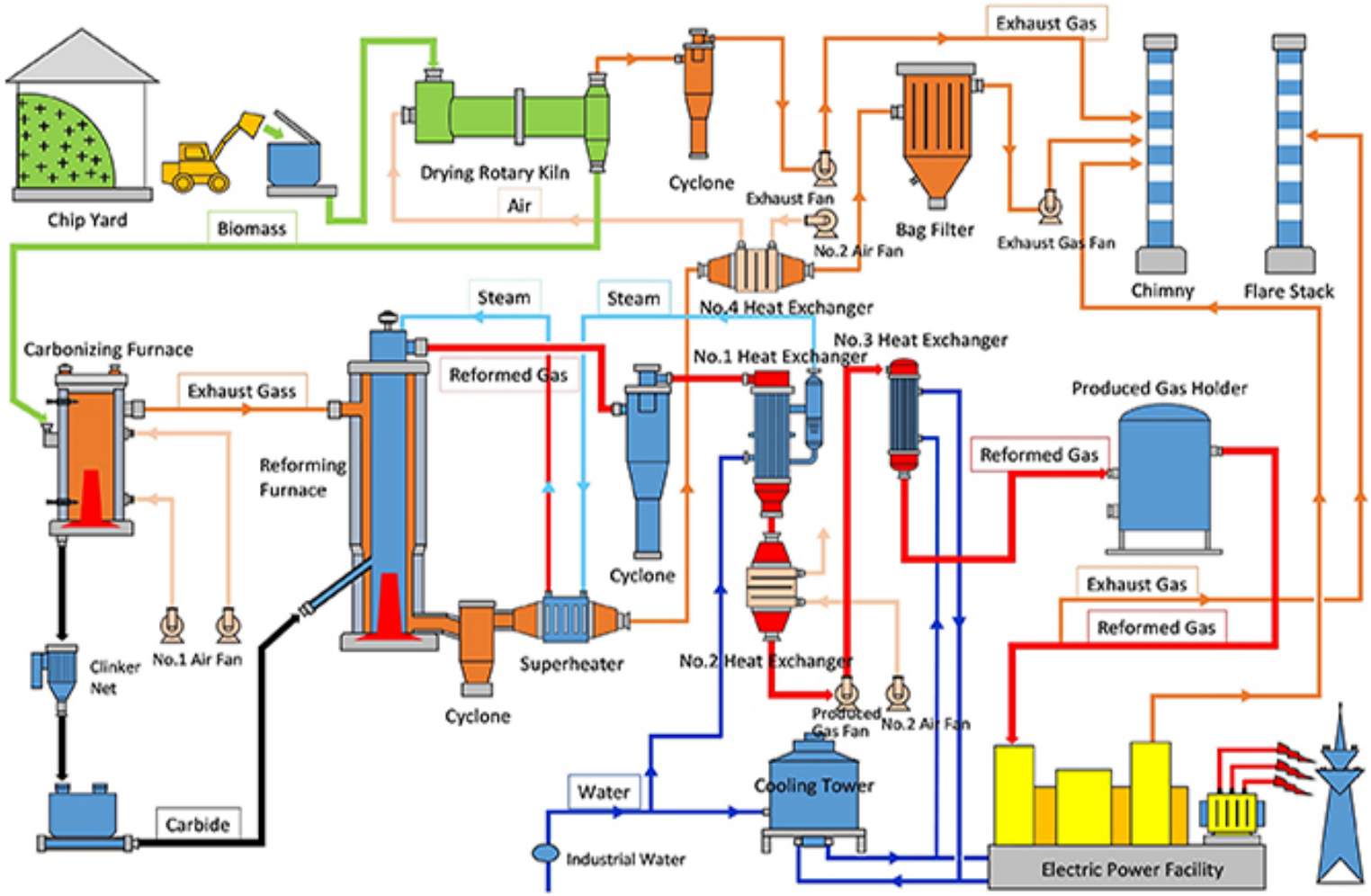
Chip Yard
Biomass
Drying Rotary Kiln
Air
Cyclone
Exhaust Fan
Exhaust Gas
Bag Filter
Exhaust Gas Fan
Chimny
Flare Stack
No.2 Air Fan
No.4 Heat Exchanger
Steam
Steam
Carbonizing Furnace
Exhaust Gass
Reformed Gas
No.1 Heat Exchanger
No.3 Heat Exchanger
Produced Gas Holder
Reformed Gas
Reforming Furnace
Cyclone
Exhaust Gas
Reformed Gas
Clinker Net
No.1 Air Fan
Superheater
No.2 Heat Exchanger
Cyclone
Produced Gas Fan
No.2 Air Fan
Water
Cooling Tower
Carbide
Industrial Water
Electric Power Facility